USED ON
—

DWG NO. C-100576

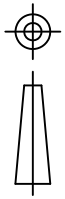

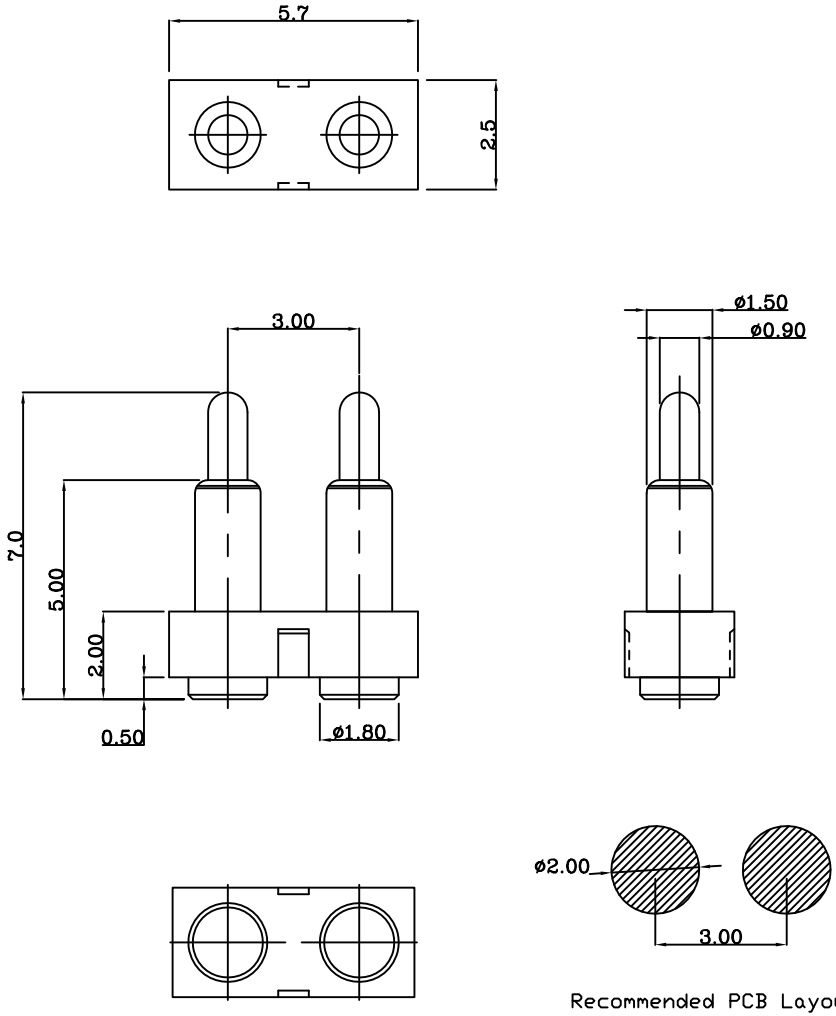

Recommended PCB Layout

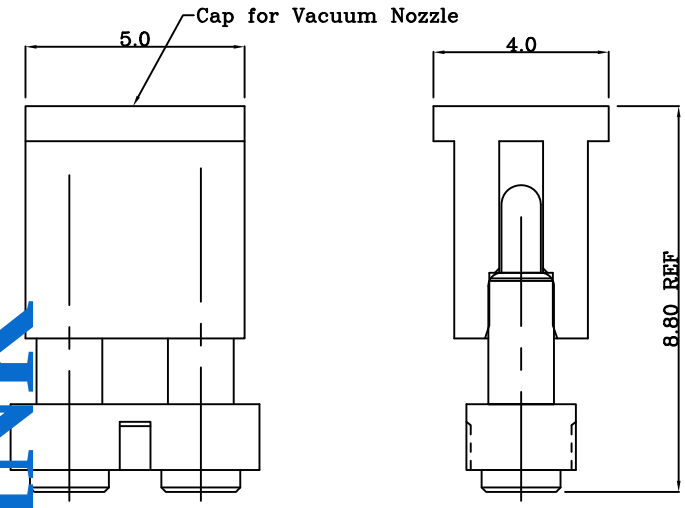

TOP-LINK

Notes:

1 Material(材质):
Housing: PA 4.6 (30% Glass Filled)Color Black. (UL94V-0)
Contact: Brass
Spring : Stainless steel wire

2 Plating:
1)Body: Min 0.1um Gold plating over min. 1.4um Nickel plating
(Body: 镀金0.1um Min 镍底1.4um Min)
2)Plunger: Min 0.4um Gold plating over min. 1.4um Nickel plating
(Plunger: 镀金0.4um Min 镍底1.4um Min)

3 Mechanical:
Total stroke(总行程): 1.70mm
Durability(寿命): 10,000 cycle min.

4 Electrical(电性能)
Contact resistance(接触抵抗): 30mOhm Max.
Voltage rating(额定电压): 36V DC Max
Current rating(额定电流): 2.0A

100576-2
PART NUMBER

THIS INFORMATION IS CONFIDENTIAL AND IS DISCLOSED TO YOU ON CONDITION THAT NO FURTHER DISCLOSURE IS MADE BY YOU TO OTHER THAN TOP-LINK WITHOUT WRITTEN AUTHORIZATION FROM TOP-LINK ELECTRONICS FACTORY

LOC	DIST
-	-

LTR	REVISION RECORD	APVD	DATE
	NEW		09'/12/07

DIMENSIONS IN MM
TOLERANCES UNLESS OTHER SPECIFIED
0 = ±-
0.0 = ±0.15
0.00 = ±0.10
0.000 = ±
ANGLE: ±1°
SURF TEXTURE: 3.2
REMOVE BURRS. BREAK SHARP EDGES R0.05 MAX
DO NOT SCALE PRINT

MATL 1	HT TR —		FIN —
DWN Qin	APVD	top-Link Electronics	Top-Link Electronics Ltd.
CHK	REL		
NAME BATTERY CONNECTOR 2 POS. PGC-1.5-7.0-R-2P-3.0PH			
SCALE 1:1	A4	DWG NO. C-100576	SHEET 1 OF 1 / REV A

4 3 2 1