USED ON
–

DWG NO. C-100517

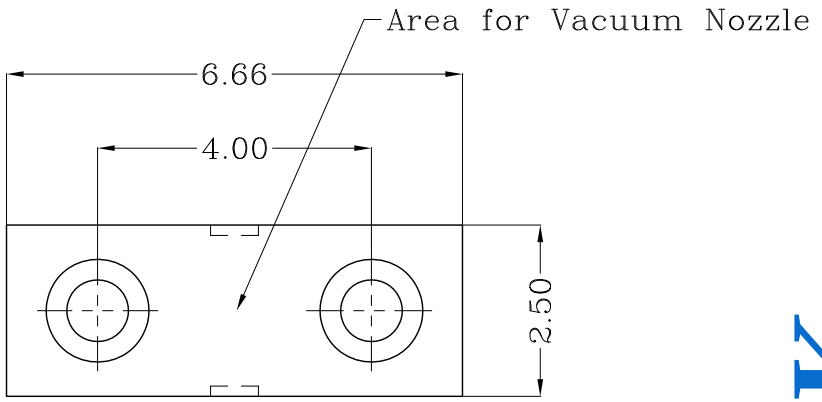

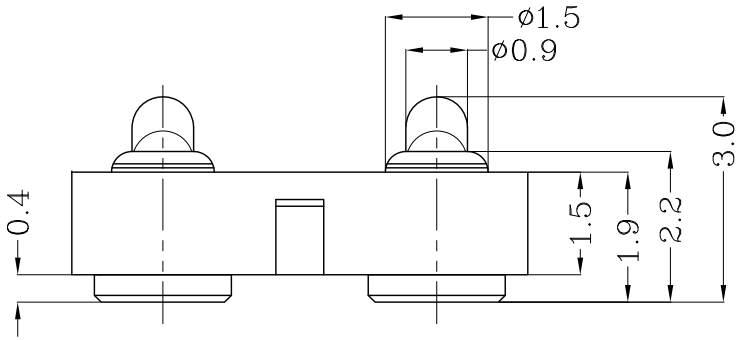

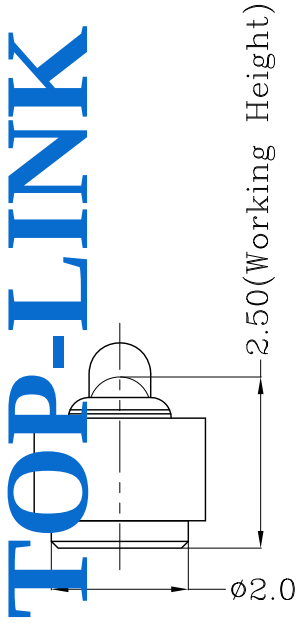

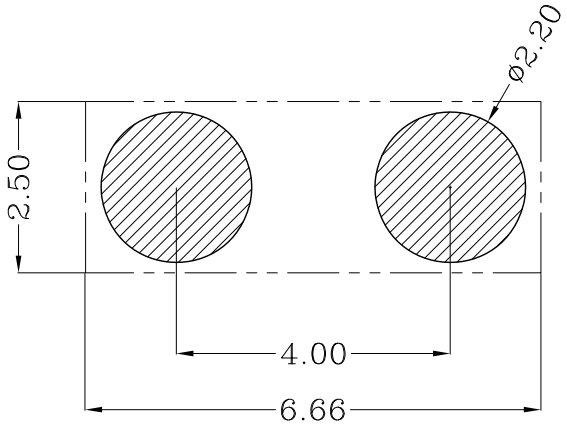

Recommended PCB Layout

Notes:
1 Material, Housing: PA 4.6 (30% Glass Filled)
Color Black.
Contact: Brass
2 Mechanical demands:
Plating Plunger: Min 0.4um Au over 1.4um Ni
Plating Body: Min 0.1um Au over 1.4um Ni.

THIS INFORMATION IS CONFIDENTIAL AND IS DISCLOSED TO YOU ON CONDITION THAT NO FURTHER DISCLOSURE IS MADE BY YOU TO OTHER THAN TOP-LINK PERSONNEL WITHOUT WRITTEN AUTHORIZATION FROM TOP-LINK LTD.

LOC –
DIST –

LTR	REVISION RECORD	APVD	DATE
	NEW		09/05/07

DIMENSIONS IN MM
TOLERANCES UNLESS OTHER SPECIFIED
0 = ±–
0.0 = ±0.15
0.00 = ±0.10
0.000 = ±–
ANGLE: ±1°
SURF TEXTURE: 3.2
REMOVE BURRS. BREAK SHARP EDGES R0.05 MAX
DO NOT SCALE PRINT

MATL 1	HT TR —		FIN —
DWN Qin	APVD Lansing	top-link Electronics	Top-Link Electronics Ltd.
CHK Andy	REL		
NAME POGO CONNECTOR 2 POSITIONS PGC-1.5-3.0-R-2P-4.0PH			
SCALE 1:1	A4	DWG NO. C-100517	SHEET 1 OF 1 / REV 1

100517-2
PART NUMBER