DWG NO. C-100265

USED ON
—

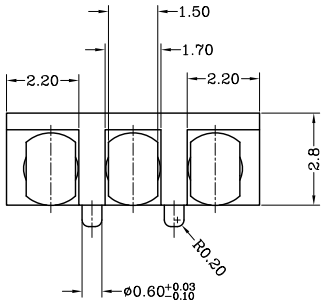

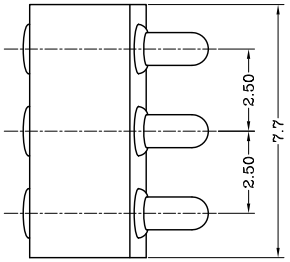

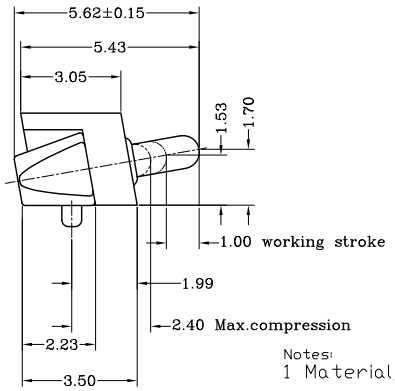

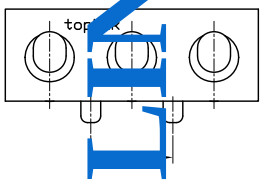

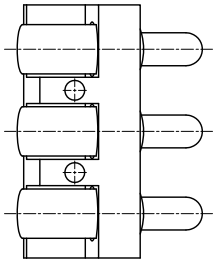

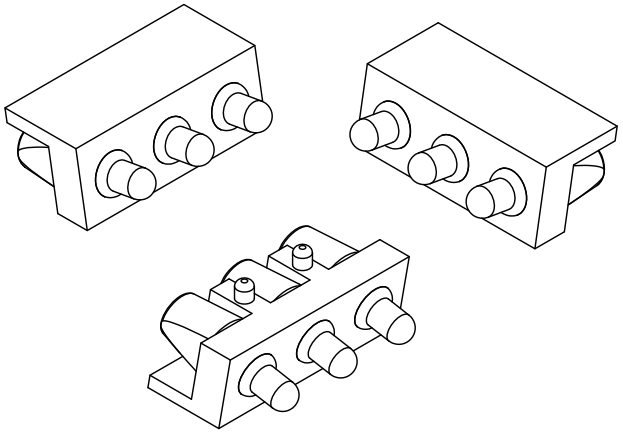

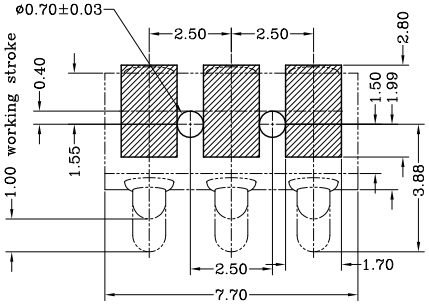

Recommended P.C.B. layout (Component Side)

Notes:
1 Material, Housing: PA46 (30% Glass Filled)
Color Black. (UL94V-0)
Contact: Brass
2 Plating:
Plating plunger: 0.75Um Au over 1.4um Ni
Plating body: 0.1um Au over 1.4um Ni.
3 Mechanical
1)Force: 165±25 gf at 1.0mm stroke
2)Durability: 10,000 cycle min.
4 Electrical
1)Contact resistance: 30mOhm Max.
2)Operating voltage: 36VDC Max.

TOP-LINK

THIS INFORMATION IS CONFIDENTIAL AND IS DISCLOSED TO YOU ON CONDITION THAT NO FURTHER DISCLOSURE IS MADE BY YOU TO OTHER THAN TOP-LINK WITHOUT WRITTEN AUTHORIZATION FROM TOP-LINK ELECTRONICS FACTORY

LOC	DIST
-	-

LTR	REVISION RECORD	APVD	DATE
	Change plating		2008/12/05
	update remark		2008/01/10

DIMENSIONS IN MM
TOLERANCES UNLESS OTHER SPECIFIED
0 = ±-
0.0 = ±0.15
0.00 = ±0.10
0.000 = ±
ANGLE: ±1°
SURF TEXTURE: 3.2
REMOVE BURRS. BREAK SHARP EDGES R0.05 MAX
DO NOT SCALE PRINT

MATL 1	HT TR —		FIN —
DWN Benny	APVD Lansing	top-link Electronics	Top-Link Electronics Ltd.
CHK Andy	REL		
NAME BATTERY CONNECTOR 3 POS. WITH PILLAR (PGC-1.5-1.53-RA-3P-2.5PH)			
SCALE 1:1	A4	DWG NO. C-100265	SHEET 1 OF 1 / REV D

100265-3
PART NUMBER